The Johns Hopkins University
Department of Mechanical Engineering
Heat Transfer Lab 530.335
Design Competition, Spring 2026

Introduction

For this project you will work with 1-3 teammates to design, fabricate, test, and evaluate a heat exchanger of your own creation.

Heat Exchanger Testing Rig

For this project you will be using the Armfield HT30XC heat exchanger testing rig (see Figure 1). The rig is designed to accommodate the Armfield HT31 tubular heat exchanger.

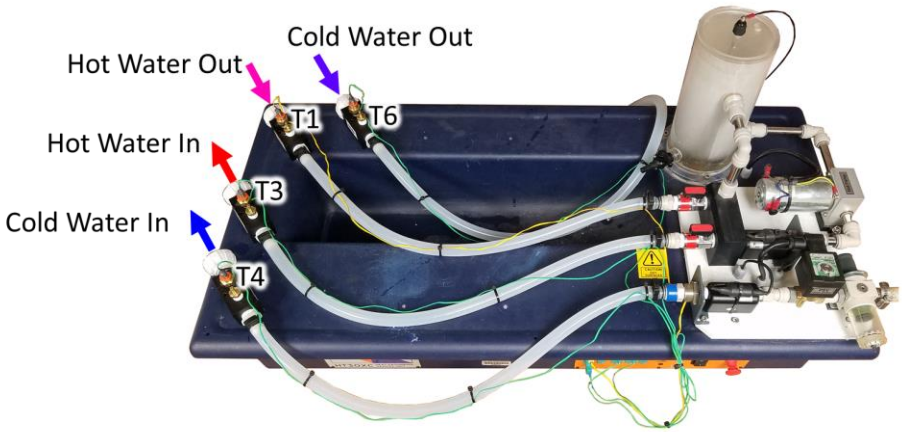

Figure 1 - Armfield HT30XC heat exchange lab testing rig

The Armfield tubular heat exchanger consists of two separate concentric tubes arranged in series in the form of a "U" to reduce its overall length (see Figure 2).

Water is heated by a 2kW heater in a hot water reservoir and then pumped through the inner (stainless steel) tubes. The flow rate of the hot water and the temperature of the hot water reservoir are controlled through a GUI on a pc.

Ice water from a large cooler is pumped through the annulus created between the inner metal tubes and the clear acrylic outer tubes. The flow rate of the cold water is controlled by adjusting the power to the cold water pump directly.

The Armfield <u>software</u> should always be set to run in COCURRENT mode. The heat exchanger can be switched between parallel and counterflow by physically switching the positions of the cold water inlet and outlet.

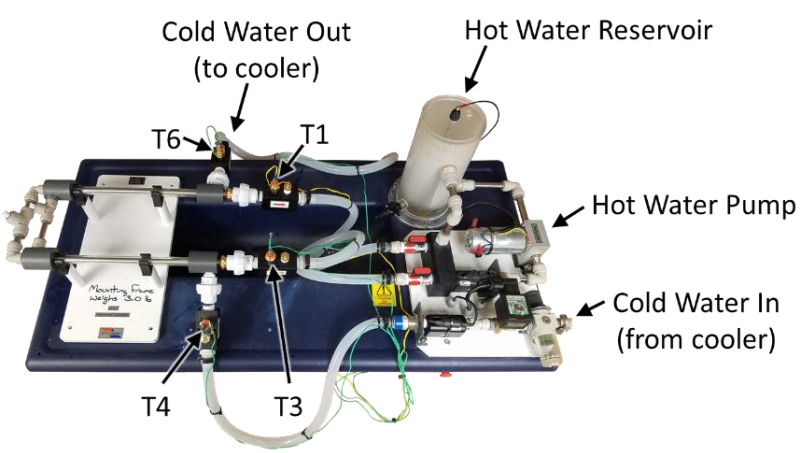

Figure 2 - The Armfield HT30XC heat exchanger rig and HT31 tubular heat exchanger unit.

Four (4) K-type thermocouples are used to measure the temperatures of the fluids at the inlets and outlets of the exchanger. The cold water inlet temperature, $T_{c,i}$, is measured by T4, and the cold water outlet temperature, $T_{c,o}$, is measured by T6. The hot water inlet temperature, $T_{h,i}$, is measured by T3, and the hot water outlet temperature, $T_{h,o}$, is measured by T1.

The Armfield tubular heat exchanger can be easily disconnected from the testing rig at the hot water and cold water inlet and outlet threaded union fittings. The tubular heat exchanger can then be removed from the rig and a different heat exchanger (e.g. of your design) can take its place.

Heat Exchanger Design

Your team must design, build, and test a heat exchanger that will connect to the testing rig shown in Figure 1. The heat exchanger must have four male threaded union couplings (provided to you) protruding from it which will connect with the female couplings of the rig. Note that the male couplings have *female* ½ NPT pipe threads which must attach to the inlets and outlets of your heat exchanger. An engineering drawing of an assembled union is presented in Figure 3 below.

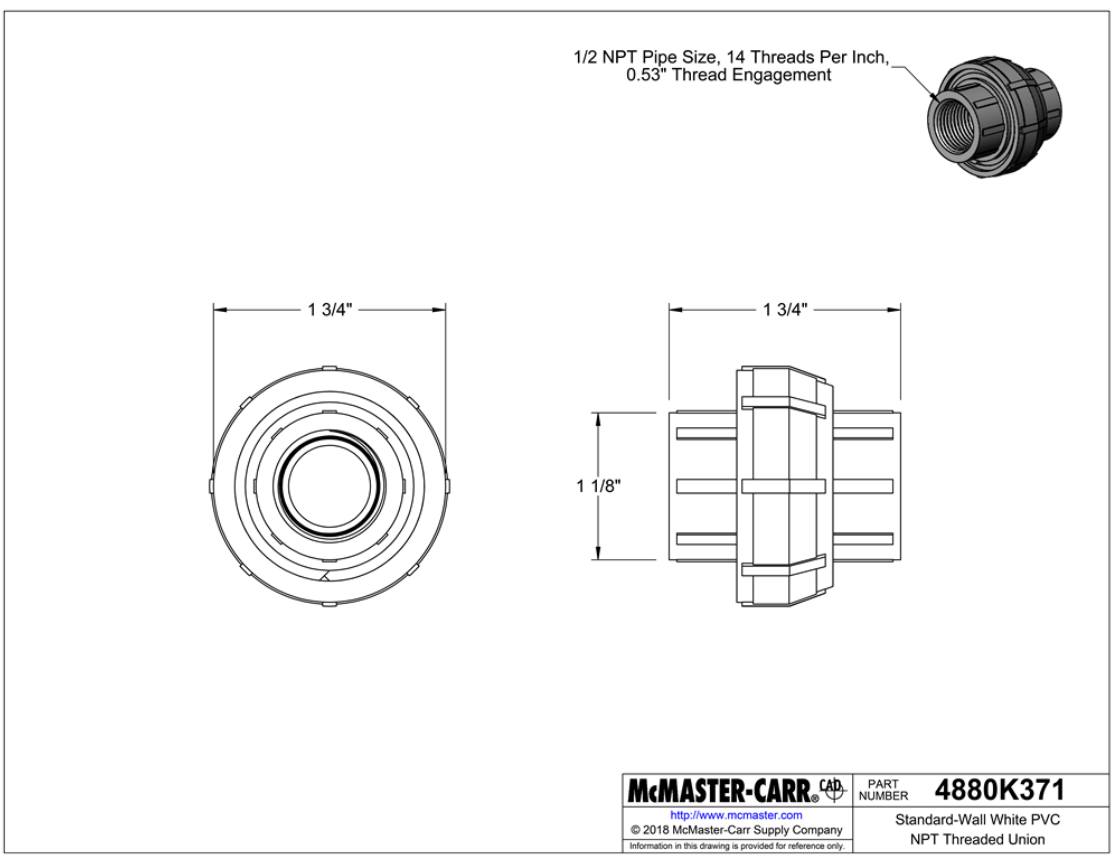

Figure 3 – Engineering drawing of assembled threaded union

Water will flow into and out of your heat exchanger through the unions as shown schematically in Figure 4 below.

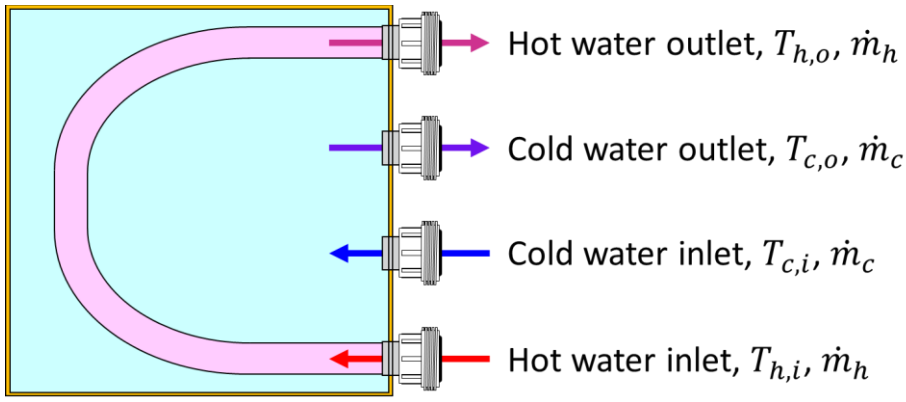

Figure 4 – Schematic of a (poorly designed) heat exchanger, and definitions of some symbols. Note the inlets and outlets for your heat exchanger can be arranged in any orientation and location.

Your heat exchanger must be able to fit completely (including the attachment couplings) in a box no larger than 14 inches long × 9 inches wide × 6 inches tall (see Figure 5).

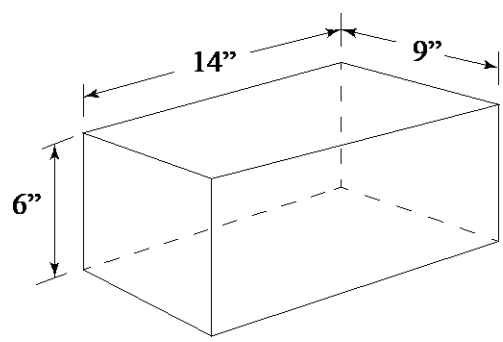

Figure 5 – Bounding box dimensions. Your heat exchanger must be able to fit completely inside.

Your heat exchanger must be designed and fabricated so that no mixing occurs between the hot and cold fluids and no water leaks out.

You will have access to the heat exchanger rig starting on the third week of classes so that you can test your designs throughout the semester.

Competition rules

1. Your instructor reserves the right to invent new rules at any time.
2. Teams may have 2 to 4 students only and all members must be in the same lab section.
3. You will receive training in the Senior Design work area on the second floor of the Wyman Park Building. You may use these facilities at any time. However, please give the Seniors priority and don't cause them any headaches.
4. Your team will receive a plastic bin for storing your parts and exchanger. Your bin must be stored on a shelf neatly in the lab room when you are not using it.
5. You must follow all safety rules, clean up after yourself, put away tools, and report shortages or breakages promptly. Failure to do those things could lead to a reduced grade for the course.
6. Each team will have a budget of $150, provided by the MechE Department.
    a. Parts and materials may only be purchased from McMaster-Carr, Amazon, or Home Depot.
    b. Once all of the teams' rosters have been determined, you will all have access to a Google form for making purchase requests.
    c. Shipping costs will not be deducted from your $150 budget.
    d. Items purchased but not used in your final heat exchanger <u>DO</u> count toward your $150 budget.
    e. The recycling of used parts and use of <u>scrap</u> materials from the machine shop and senior design areas are always encouraged, but you must still account for their cost if you choose to do so. **And be sure to ask for permission before taking anything from these areas.**
    f. Laser cutting, 3D printing, and machine shop charges <u>DO</u> count toward your $150 budget. You must maintain a record of these charges for your final report.
7. The hot water input temperature $T_{h,i}$ for your heat exchanger will be set to **30°C**.
8. The cold water will come from the cooler filled with (initially) ice water.
9. The cold water and hot water volumetric flow rates for your heat exchanger will both be set to **2 liters per minute** (or as close as you can get). Your heat exchanger must be designed to operate at these flow rates.

10. There will be two official evaluations of your heat exchangers. The first evaluation will occur during your scheduled section during the week of March 31st. The heat exchanger you present at this first evaluation must meet all of the requirements and constraints specified in this handout, but it does not need to perform especially well.

    Your final heat exchanger will be evaluated during the week of April 13th.

    For each evaluation your heat exchanger will be connected to the testing rig and allowed to run until it achieves steady state operation, as judged by the test rig thermocouple temperature measurements. Steady state means the measured temperature change on all channels is indistinguishable from noise.

    Your heat exchanger will be evaluated based on the measured and calculated parameters explained in the next section.

Figures of Merit

Heat exchangers will be evaluated on several different measures of excellence. Each of these corresponds to an engineering scenario or need. For example, if a heat exchanger must work on a spacecraft, then cost would probably not be a major consideration but minimizing the mass would be very important.

Measurements

The hot water and cold water inlet and outlet temperatures ($T_{h,i},\ T_{h,o}, T_{c,i}, T_{c,o}$) and the *volumetric* flow rates are measured and recorded by the testing rig instrumentation.

Additional measurements you will need to make are:

m_e Mass of your empty (no water) heat exchanger, in kg

V_e Volume of smallest bounding rectangular prism (i.e. the smallest box into which your heat exchanger could completely fit), in m^3.

ΔP_{cold} Drop in the cold water pressure through your heat exchanger, in kPa

ΔP_{hot} Drop in the hot water pressure through your heat exchanger, in kPa

x_e Total cost of your final heat exchanger **including all purchases and all manufacturing charges**, in USD ($).

Calculations

$q_{h\rightarrow} = \dot{m}_h c_p \left(T_{h,i} - T_{h,o}\right)$ Rate of heat removed from hot water, in W

$q_{\rightarrow c} = \dot{m}_c c_p \left(T_{c,o} - T_{c,i}\right)$ Rate of heat transferred to cold water, in W

$F_1 = q_{h\rightarrow}$ Figure of Merit 1, in W

$F_2 = \frac{q_{h\rightarrow}}{V_e}$ Figure of Merit 2, in W/m^3

$F_3 = \frac{q_{h\rightarrow}}{m_e}$ Figure of Merit 3, in W/kg

$F_4 = \frac{q_{h\rightarrow}}{\Delta P_{max}}$ Figure of Merit 4, in W/kPa ($\Delta P_{max} = max[\Delta P_{cold}, \Delta P_{hot}]$)

$F_5 = \frac{q_{h\rightarrow}}{x_e}$ Figure of Merit 5, in W/USD

Your team should decide, early in the design process, which Figure of Merit you want to try to maximize and include this in your design proposal.

Prizes will be awarded to the teams whose final heat exchangers produce the highest values of each figure of merit. (One prize per team.)

Progress Reports

During weeks when your lab section is scheduled for “project work” (see tentative schedule at the end of this handout), you are expected to be working on designing, fabricating, and testing your heat exchangers. On each of these weeks, and before the end of your section time, your team must meet with your teaching assistant and, together, submit a short report on the progress you have made since the previous week. A portion of your final course grade will be based on these reports (see syllabus for grading details).

Heat Exchanger Design Proposal

Your team must submit a brief design proposal for your heat exchanger idea(s) by **11:59 pm on Friday, February 27th**. Submit the proposal electronically through the Canvas course website.

Your proposal must include the following:

- A clear and concise description of your proposed heat exchanger using a combination of hand sketches (or CAD) and text. This should include:
    - Views of the exterior of your proposed heat exchanger clearly showing the locations, orientations, and functions (e.g. hot water inlet, cold water outlet) of the four (4) union couplings.
    - Views of the interior of your proposed heat exchanger clearly showing the flow paths of the two fluids, and with significant dimensions noted and proper labeling of all parts/components.
- A list of all of the various parts, materials, and components you will need to build your proposed heat exchanger. For each item you should indicate the source (i.e. vendor) and the estimated cost.
- A description of the various fabrication techniques that will be used to construct your heat exchanger.
- An explanation for why you think your heat exchanger will perform better than the Armfield heat exchanger.
- Any questions you have for the course instructors.

Your proposal, along with the other teams' proposals, will be reviewed publicly during our lab lecture on Wednesday, March 4th.

Heat Exchanger First Evaluation

The first official evaluation of your heat exchanger will occur during your scheduled section during the week of March 30st.

Your team must then submit a short (< 3 min) formal/semi-professional video, upload it to YouTube (or similar), and submit the video's URL to Canvas by **11:59pm on Monday, April 6th**.

Your video must include the following:

1. Your video should start with one team member clearly stating your team's number and each of your team members' names.

2. Your video should then show views of your heat exchanger from all angles as one team member describes its design. The description should include

   a. Does your design follow one of the common styles of heat exchanger (concentric tube, shell & tube, plate)?
   b. Describe the flow paths of the hot water and cold water
   c. Describe the interface surface(s) through which heat transfer occurs
   d. Explain what materials were used
   e. State the important sizes (e.g. "4 × 6 × 1/16th inch aluminum plate", "3-inch schedule 40 PVC", "Half-inch copper pipe")
   f. Describe the fabrication techniques you used in building it

3. You should then show that the heat exchanger connects to the testing unit properly at both inlets and at both outlets.

4. Next, show the unit running under the desired operating conditions. One team member should state clearly the values of the

   - hot water inlet and outlet temperatures (°C)
   - cold water inlet and outlet temperatures (°C)
   - hot and cold water flow rates (l/min)
   - hot and cold water pressure drops (kPa)

   You should also note if and where any leakage occurs.

   Finally, you should describe/explain/address:

   a. What did you learn from this first evaluation?
   b. What will you be changing for your final heat exchanger?

Heat Exchanger MATLAB Code

Your team must submit a MATLAB code modeling the performance of your heat exchanger by **11:59 pm on Monday, April 13th**. Submit the code through the Canvas course website.

The inputs to your code should be

- the inlet temperature of the hot water, in units of °C.
- the inlet temperature of the cold water, in units of °C.

The outputs of your code should be

- $T_{h,o}$ Hot water outlet temperatures (°C)
- $T_{c,o}$ Cold water outlet temperatures (°C)
- ΔP_{cold}, ΔP_{hot} Water pressure drops through heat exchanger (kPa)
- $q_{h\rightarrow}$ $(= F_1)$ Rate of heat removed from hot water (W)
- $q_{\rightarrow c}$ Rate of heat transferred to cold water (W)
- $\eta = \frac{q_{\rightarrow c}}{q_{h\rightarrow}}$ Thermal efficiency
- U Overall heat transfer coefficient (W/(m^2·K))
- ε Heat exchanger effectiveness
- NTU Number of heat transfer units (calculate from value of U)

The flow rates of the hot and cold water should be set to 2 liters per minute.

Your code should begin with a set of comments describing the various assumptions made in modeling your heat exchanger.

Your code should follow good programming practices and **include lots of comments** so that we can <u>easily</u> make sense of how it works.

Heat Exchanger Final Evaluation and Report

The final evaluation of your heat exchanger will occur during your scheduled section during the week of April 13th. Your team must then submit a short video by **11:59pm on Monday, April 20st** which will be reviewed in Lecture class on **April 22rd**.

The final report must be submitted by **11:59pm on Monday, April 27th**.

<u>Video</u>

Each design team is to submit a short (< 3 min) formal/semi-professional video, upload it to YouTube (or similar), and submit the video's URL to Canvas. The video must include the following:

1. Your video should start with one team member clearly stating your team's number and each of your team members' names.

2. Your video should then show views of your heat exchanger from all angles as a team member describes its design. The description should include
   a. Does your design follow one of the common styles of heat exchanger (concentric tube, shell & tube, plate)?
   b. Describe the flow paths of the hot water and cold water.
   c. Describe the interface surface(s) through which heat transfer occurs.
   d. Explain what materials were used.
   e. State the important sizes (e.g. "4 × 6 × 1/16th inch aluminum plate", "3-inch schedule 40 PVC", "Half-inch copper pipe")

3. Next, describe the fabrication techniques used in constructing your final heat exchanger.

4. Next, show the unit running under the desired operating conditions and note if and where any leakage occurs.

5. Finally, state and show your predicted value for Figure of Merit F_1 (= $q_{h\rightarrow}$) from your MATLAB code, and the actual five Figure of Merit values for your final heat exchanger.

Final Report

Submit your report electronically through the Canvas course website.

Your final report must include the following sections:

- Cost report: Show all of the purchases you made throughout the entire semester. Also tabulate all of the costs associated with your final heat exchanger (and include the total cost of it). **Be sure to include all manufacturing charges (e.g. laser cutter usage) in both.**
- Modeling: Explain the approach you took in modeling your heat exchanger. Include the equations you used and describe how you derived the values for your heat transfer coefficients. Include references as appropriate. Also include your predicted value for Figure of Merit F_1 (= $q_{h\rightarrow}$).
- Results: Present well-formatted tables of the various raw measurements and calculated values, including (and presented in this order):
    - $T_{h,i}$, $T_{h,o}$ Hot water inlet and outlet temperatures (°C)
    - $T_{c,i}$, $T_{c,o}$ Cold water inlet and outlet temperatures (°C)
    - $\dot{V}_h$, $\dot{V}_c$ Hot and cold water volumetric flow rates (l/min)
    - ΔP_{cold}, ΔP_{hot} Water pressure drops through heat exchanger (kPa)
    - m_e Mass of your (empty) heat exchanger (kg)
    - V_e Volume of smallest bounding rectangular prism (m^3)
    - x_e Cost of your heat exchanger, in USD ($)
    - $q_{h\rightarrow}$ Rate of heat removed from hot water (W)
    - $q_{\rightarrow c}$ Rate of heat transferred to cold water (W)
    - $\eta = \frac{q_{\rightarrow c}}{q_{h\rightarrow}}$ Thermal efficiency
    - U Overall heat transfer coefficient ($W/(m^2 \cdot K)$)
    - ε Heat exchanger effectiveness
    - NTU Number of heat transfer units (calculate from value of U)
    - $F_1 = q_{h\rightarrow}$ Figure of merit 1 (W)
    - $F_2 = \frac{q_{h\rightarrow}}{V_e}$ Figure of merit 2 (W/m^3)
    - $F_3 = \frac{q_{h\rightarrow}}{m_e}$ Figure of merit 3 (W/kg)
    - $F_4 = \frac{q_{h\rightarrow}}{\Delta P_{max}}$ Figure of merit 4 (W/kPa)
    - $F_5 = \frac{q_{h\rightarrow}}{x_e}$ Figure of merit 5 (W/$)

  Present these performance values for **both your final heat exchanger and the Armfield tubular heat exchanger** (except for F_5).

- Discussion
  - Compare and contrast the predicted performance of your final heat exchanger to its actual performance. Explain any discrepancies.
  - Compare and contrast the performance of your final heat exchanger to the Armfield tubular heat exchanger.
  - Address the following questions:
    - If $\eta \neq 1$, provide an explanation for the errant heat loss or gain, and explain the effect this had on the performance of your heat exchanger.
    - What limited the performance of your design?
    - Can you define, and draw, a next generation design that would probably perform better yet can still be made for reasonable cost?
    - What new/different manufacturing method(s) or technology would have helped to improve the performance of your heat exchanger?
    - What things did you learn that will help you in your next design project?
    - What suggestions do you have for improving the design project next year?

Your final design project report should follow the same formatting guidelines (but not structure) as your previous Heat Exchanger Laboratory report (e.g. grammar, punctuation, scientific notation, tables).

Tentative Schedule

Week of	Lab Sections	Lab Lecture
Jan 19	No Lab	Course intro and Heat exchanger lab basics
Jan 26	Heat exchanger lab	Fundamentals of convection
Feb 2	No Lab	Team project kick-off
Feb 9	Project work	Seals and Adhesives
Feb 16	Tube bending and soldering training w/ Mark Cooper from WSE Manuf.	Computational modeling
Feb 23	Project work	No lecture
Mar 2	No Lab	Proposal critiques
Mar 9	Project work	No lecture
Mar 16	Spring Break	
Mar 23	Project work	No lecture
Mar 30	First HX evaluations	No lecture
Apr 6	Project work	No lecture
Apr 13	Final HX evaluations	No lecture
Apr 20	No Lab	Presentation of final videos

Due Dates:	Monday, Feb 9, 11:59pm	Heat exchanger lab problem set
	Friday, Feb 27, 11:59pm	Heat exchanger proposal
	Monday, April 6, 11:59pm	Videos from first HX evaluation
	Monday, April 13, 11:59pm	MATLAB or Python code
	Monday, April 20, 11:59pm	Videos from final HX evaluation
	Monday, April 27, 11:59pm	Final project report